CATALOG OF REPLACEMENT PARTS

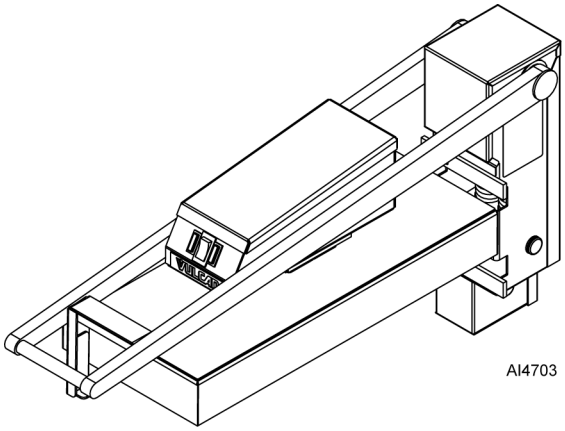

VMCS CLAMSHELL

VMCS-101
VMCS-102
VMCS-201
VMCS-202

 © Vulcan 2026

Table of Contents

4 CONTROL HOUSING
6 PLATE ASSEMBLY
8 ARM MECHANISM

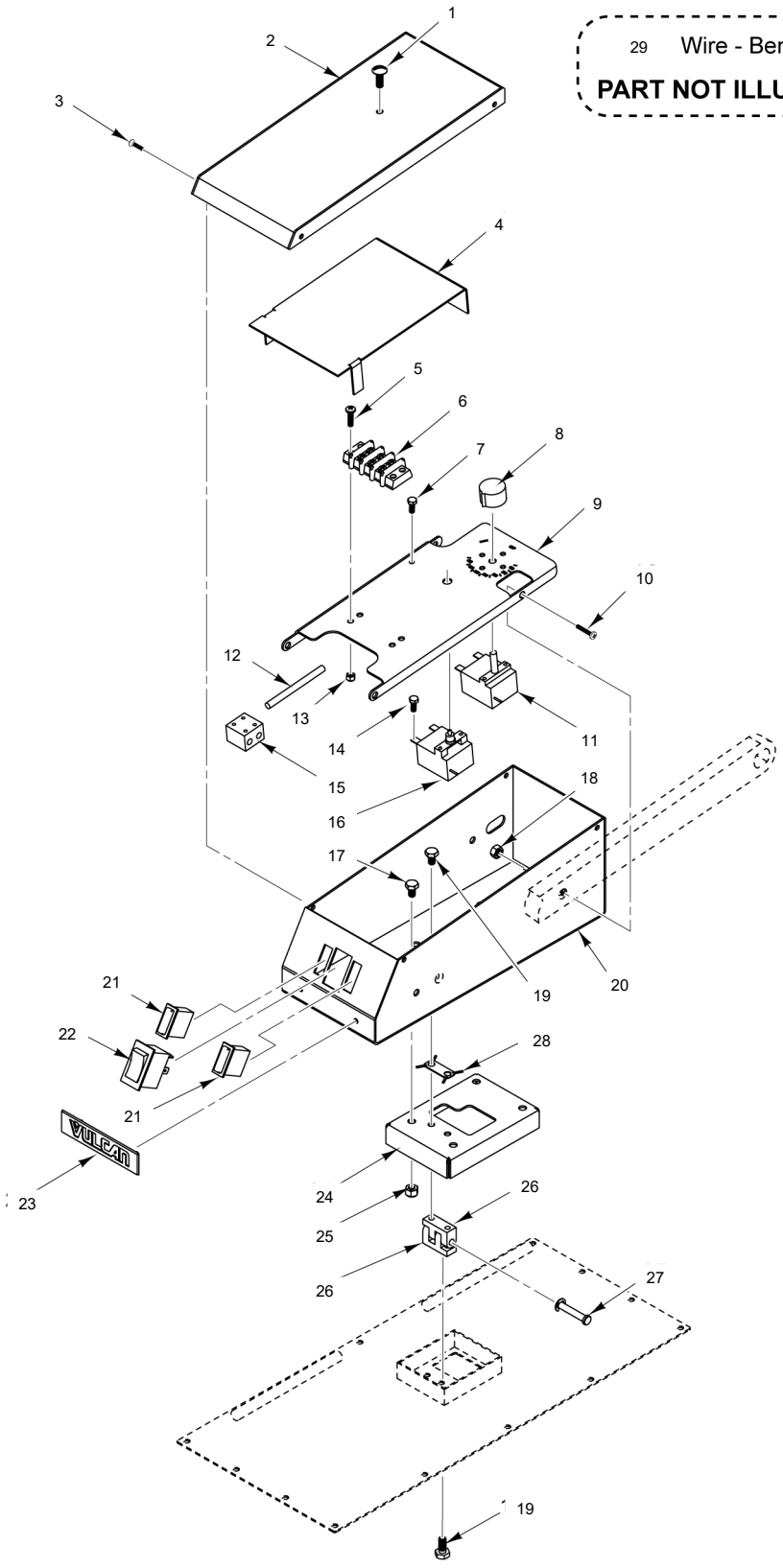

CONTROL HOUSING

CONTROL HOUSING

ILLUS. PL-60657	PART NO.	NAME OF PART	AMT.
1	00-945002	Screw 1/4-20 Truss Hd. (5/8" Lg)	15
2	00-945031	Top Controls Box Weldment	1
3	00-945009	Screw 8-32 x 3/8 Pan Hd.	6
4	00-945060	Wiring Cover Plate	1
5	00-927435	Screw 10-24 x 3/4 Lg.	4
6	00-945076	Terminal Block	1
7	00-945002	Screw 1/4-20 Truss Hd.	1
8	00-411242-00001	Knob	1
9	00-945032	Controls Box Mount Shelf	1
10	00-945000	Screw 1/4-20 x 1-1/4 Countersink	4
11	00-944136	Temperature Control	1
12	00-945066	Wiring Kit	1
13	00-730534	Nut 10-24 Hex KEPS	4
14	00-922616	Self-Tapping Screw 10-16 x 1/2	1
15	00-945077	Ceramic Junction Box	1
16	00-944133	High Limit Switch	1
17	00-945105	Screw - Cap 1/4-20 x 3/8	2
18	NS-047-72	Lock Nut 1/4-20	4
19	00-945005	Screw 1/4-20 x 7/16 Hex Hd.	8
20	00-945030-0000A	Lower Controls Box Weldment	1
21	00-944131	Light - Indicator	2
22	00-944399	Switch - On / Off Assy	1
23	00-957916-00003	Nameplate - Small (Vulcan)	1
24	00-945029	Platen Mount Plate	1
25	NS-047-72	Lock Nut 1/4-20	8
26	00-945045	Hinge Parts	2
27	00-945013	Pin - Clevis 1/4 x 1-1/2	1
28	00-976881-0000A	Kit - Safety Wire (Incls. Item 17)	1
29	00-945106	Wire - Bend & Stay	1

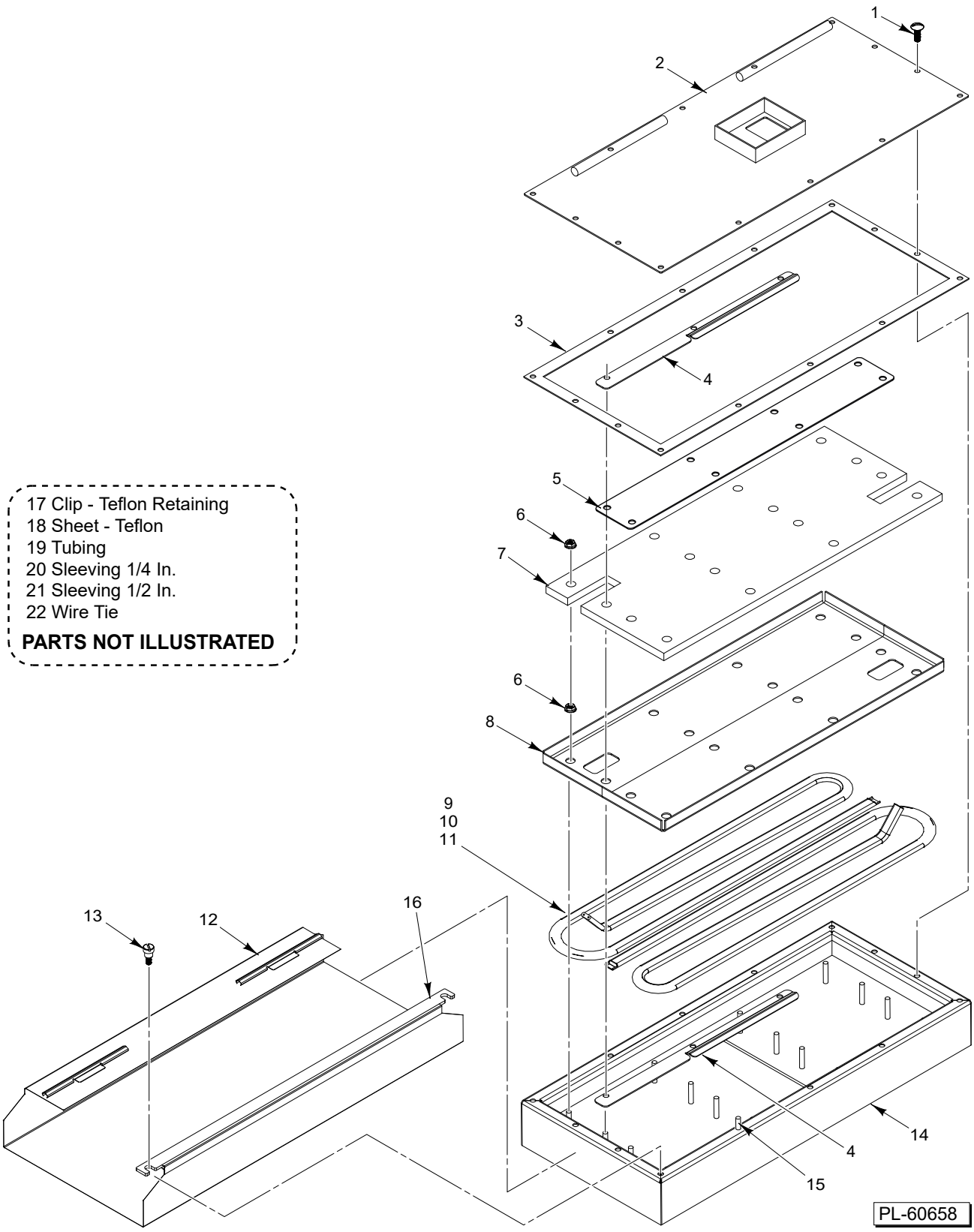

17 Clip - Teflon Retaining
18 Sheet - Teflon
19 Tubing
20 Sleeving 1/4 In.
21 Sleeving 1/2 In.
22 Wire Tie

PARTS NOT ILLUSTRATED

PLATE ASSEMBLY

PLATE ASSEMBLY

ILLUS. PL-60658	PART NO.	NAME OF PART	AMT.
1	00-945002	Screw 1/4-20 Truss Hd.	12
2	00-945033-0000A	Platen Assy. Cover	1
3	00-945063	Platen Cover Gasket	1
4	000-944371-B0001	Bracket - Retainer	2
5	00-944954	Plate - Insulation Retainer	1
6	00-945075	Lock Nut 1/4-20 Flange Hex	32
7	00-945053	Platen Insulation	1
8	00-945019	Retainer - Heating Element	1
9	00-945052-00001	Element - Heating (208 V.) (Watlow)	1
10	00-913126-00084	Kit - Heating Element Repair (208 V.)	1
11	00-945052-00002	Element - Heating (240 V.) (Watlow)	1
*12	00-945085	Teflon Kit (Incls. Items 16 thru 18)	1
13	00-945086	Teflon Mount 1/4-20 Shoulder Bold	2
14	00-945082-000A3	Platen Plate and Side Panel Assy. (Smooth)	1
15	00-113631-00024	Stud - Self Clinching	AR
16	00-944503	Bracket - Teflon	1
17	00-944504	Clip - Teflon Retaining	1
18	00-944505	Sheet - Teflon	1
19	00-976846	Tubing	AR
20	00-719566	Sleeving - Silicon 1/4 In.	AR
21	00-976850-00024	Sleeving - Silicon 1/2 In.	AR
22	00-498573-00001	Wire Tie	AR

* Teflon sheets for Panda Express are not sourced by ITW.

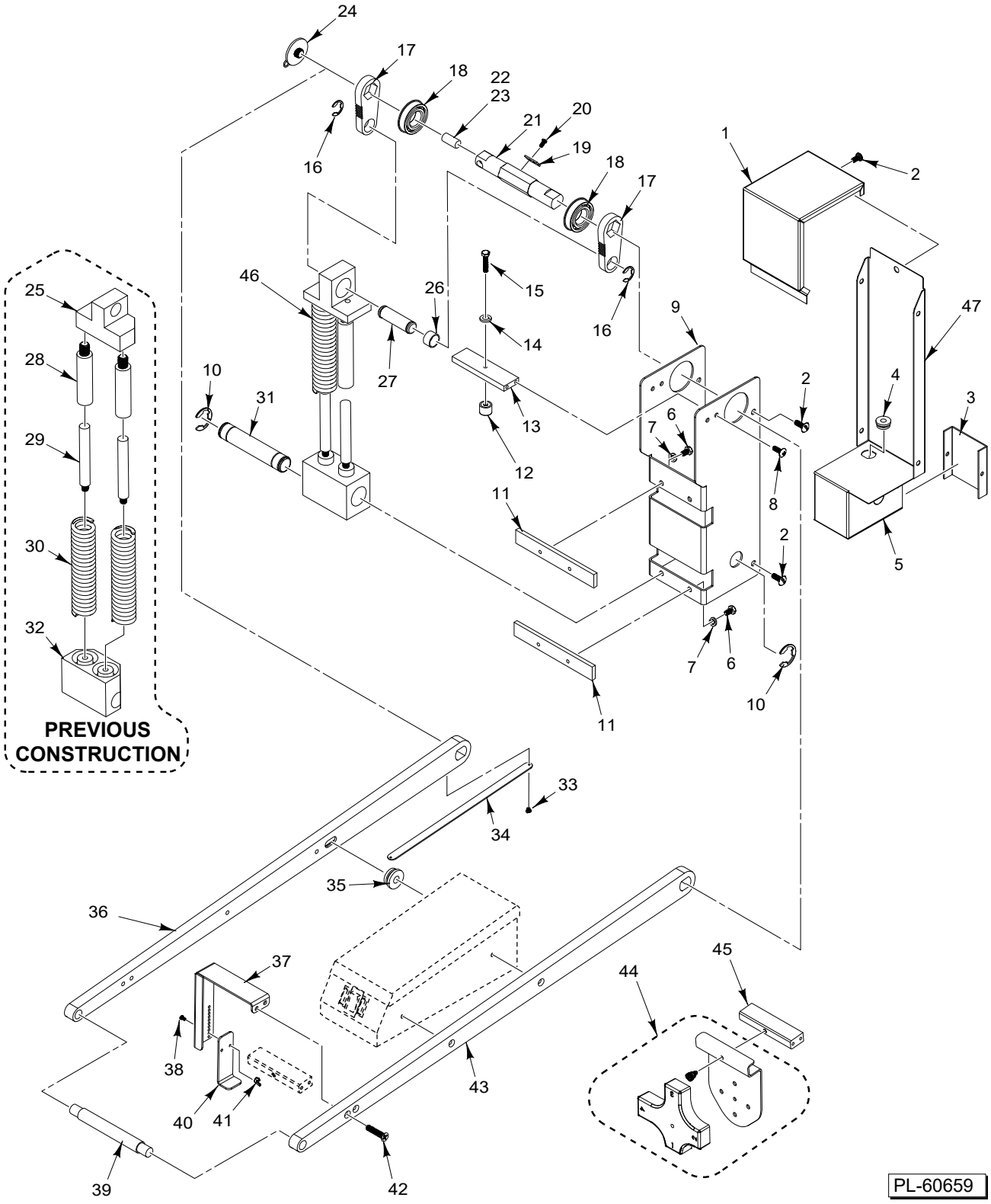

ARM MECHANISM

ARM MECHANISM

ILLUS. PL-60659	PART NO.	NAME OF PART	AMT.
1	00-945027	Rear Housing Lid	1
2	00-945002	Screw 1/4-20 Truss Hd.	8
3	00-945028	Junction Box Cover	1
4	00-945083	Grommet	1
5	00-978900-10030	Kit-VMCS-BaseE, Rear Cover and Junction Box	1
6	00-945005	Screw 1/4-20 x 7/16 Hex Hd.	2
7	00-945007	Lockwasher 1/4	2
8	00-945001	Screw 1/4-20 x 3/4 Truss Hd.	4
9	00-945025	Rear Housing	1
10	00-945006	Retaining Clip 1 Shaft	4
11	00-945011	Mount Bars, VMCS	2
12	00-945010	Height Control Bumper	1
13	00-945034	Bumpstop Mount Plate	1
14	00-945007	Lockwasher 1/4	1
15	00-945004	Screw 1/4-20 x 1-1/4	1
16	00-945062	C-Clip 3/4 Shaft	2
17	00-945020	Pitman Arm Base	2
18	00-945059	Ball Bearing	2
19	00-945058	Centering Bracket	1
20	00-945009	Screw 8-32 x 3/8 Pan Hd.	1
21	00-945018	Upper Pivot Rod	1
22	00-719566	Sleeving - Silicon	1
23	00-945003	Spring - Cut To Length (0.313")	1
24	00-945035	Cap - Axle Arm	1
*25	00-945021	Upper Spring Mount (Previous Construction)	1
26	00-945078	Pitman Arm Bushing	4
27	00-945061	Upper Spring Cap Pin	1
*28	00-945022	Spring Alignment Rod (Previous Construction)	2
*29	00-945056	Lower Spring Alignment Shaft (Previous Construction)	2
*30	00-945051	System Spring (Previous Construction)	2
31	00-945024	Lower Pivot Rod	1
*32	00-945023	Lower Spring Mount (Previous Construction)	1
33	00-498756	Screw 6-32 x 3-16	1
34	00-945048	Cover - Wireway	1
35	00-945083	Grommet	1
36	00-945015-00001	Left Arm (With Wireway)	1
37	00-944953	Bracket - Gap Adjust	1
38	00-091792-A0145	Screw	2
39	00-945017-00001	Arm Handle	1
40	00-944952	Bracket - Gap Adjust Leg	1
41	00-090866-A0007	Wing Nut	2
42	00-945000	Screw 1/4-20 x 1-1/4 Countersink	4
43	00-945016-00001	Right Arm (Without Wireway)	1
44	00-945087-0000A	Gap Adjust Accessory	1
45	00-945088	Mount Bar - Gap Adjust (Req'd W / Item 44)	1
**46	00-976771-0000A	Spring Mount Assy. (Current Construction)	1
47	00-976860	Cover - Rear	1

* No Longer Available, Use item 46.
** Can only be exchanged as an assembly in the field.